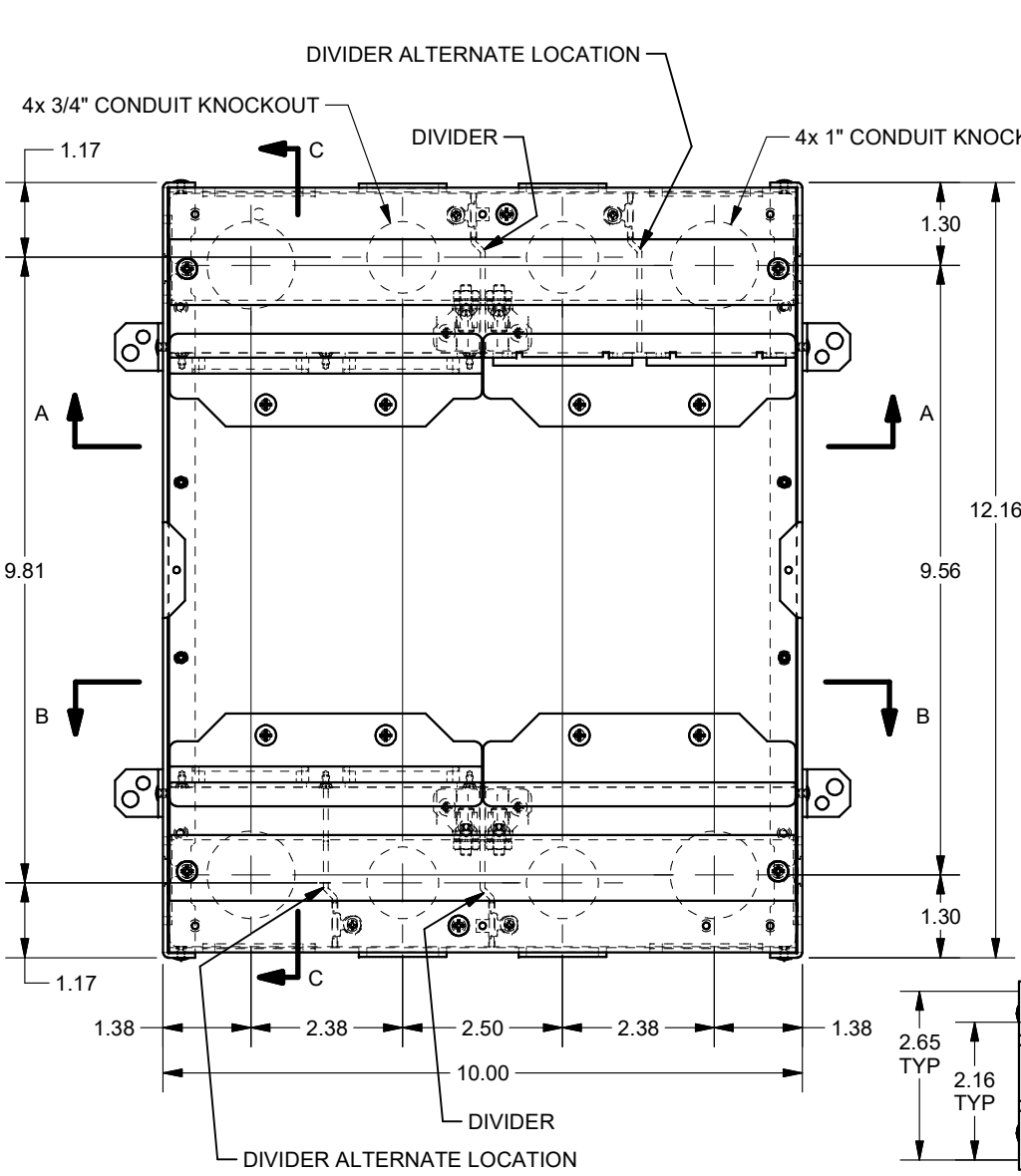

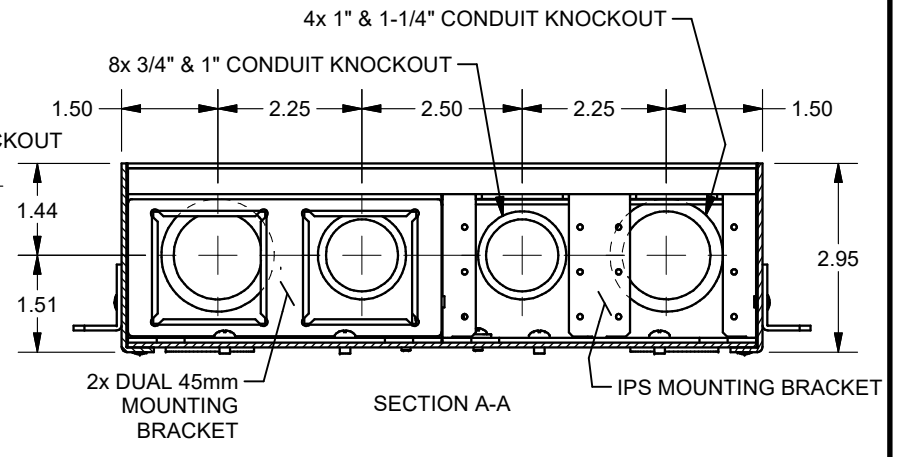

SECTION A-A

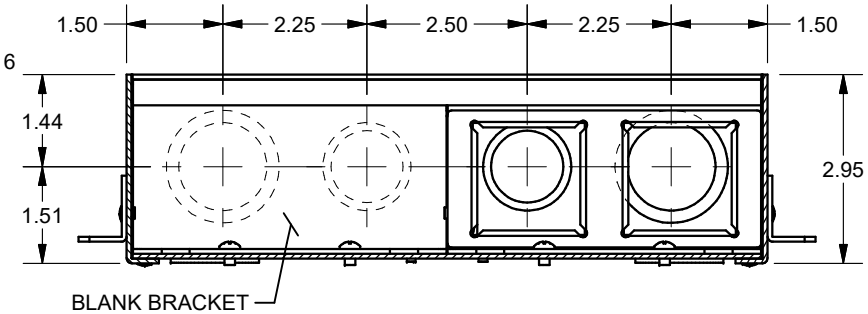

SECTION B-B
VIEW ROTATED
180° CLOCKWISE

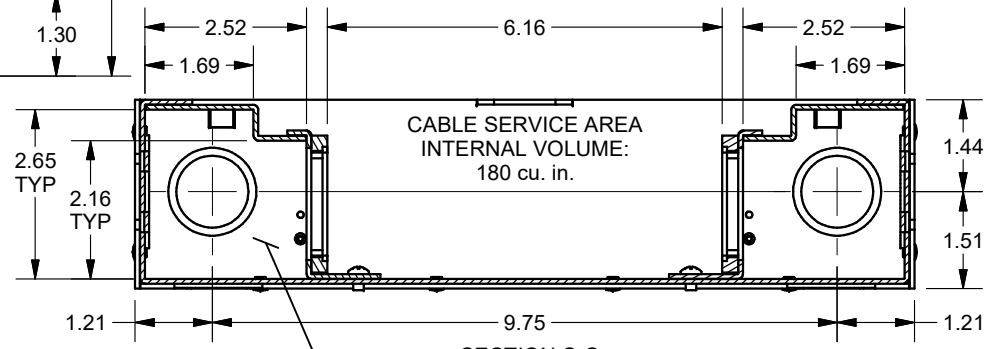

SECTION C-C
VIEW ROTATED
90° CLOCKWISE

INTERNAL VOLUME (TYP BOTH SIDES):
NO DIVDER - 61 cu. in.
CENTER DIVIDER - 30.5 cu. in. & 30.5 cu. in.
OFFSET DIVIDER - 46 cu. in. & 15 cu. in.

FSR inc.
244 BERGEN BLVD.
WOODLAND PARK, NJ 07424
TEL (973) 785-4347
FAX (973) 785-3318

TITLE: FL-500P-80MM			
DRAWN BY: JRE	DATE: 04/05/18	REV: -	
DWG#: FL-500P-80MM		SCALE: -	