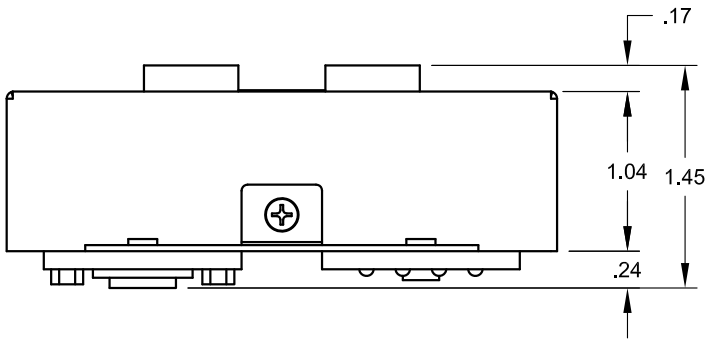

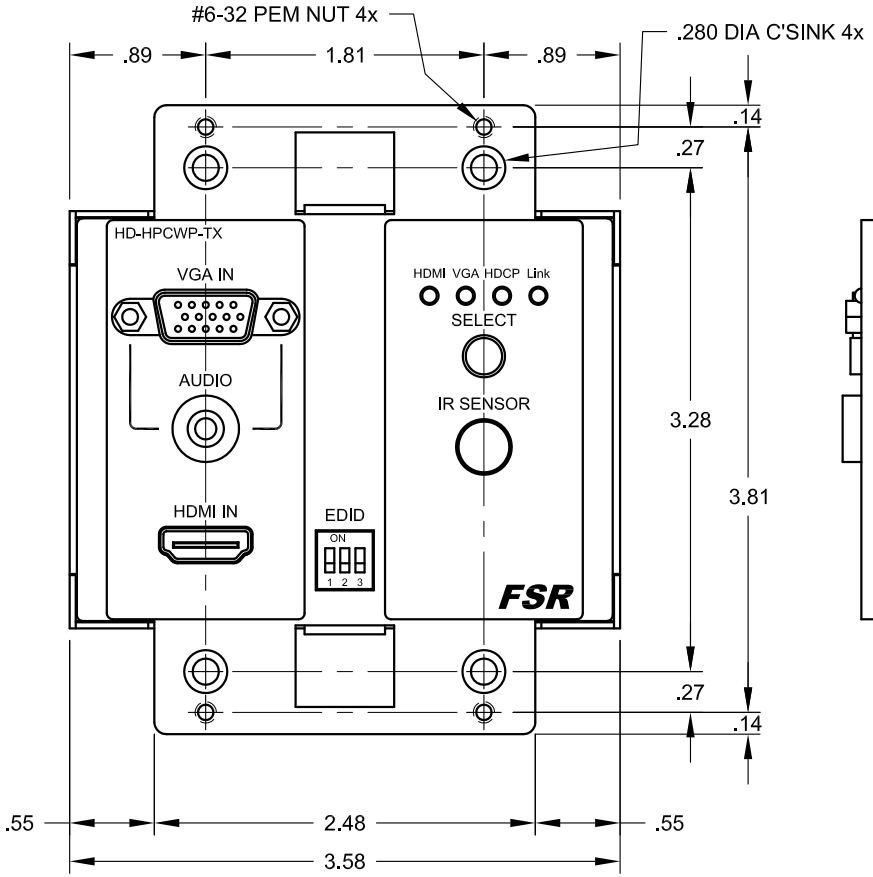

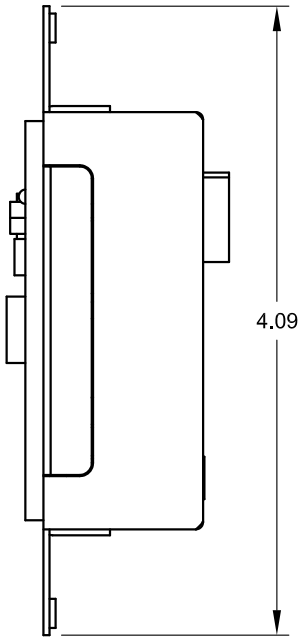

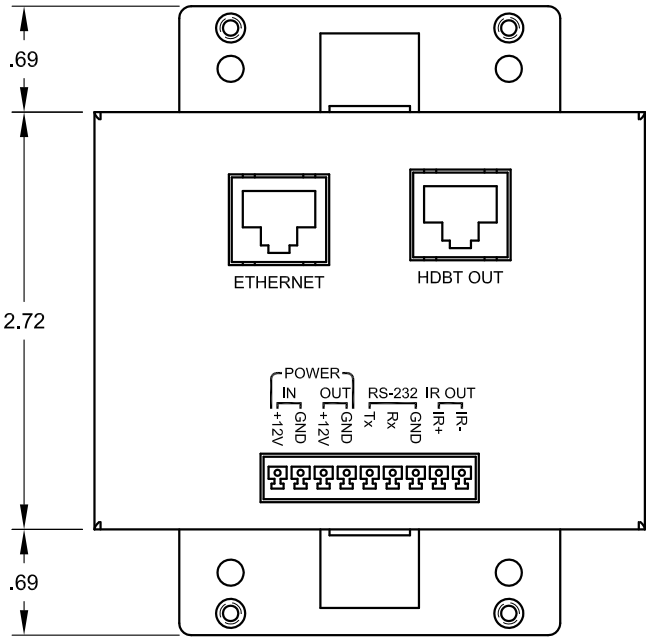

FSR inc.
244 BERGEN BLVD.
WOODLAND PARK, NJ 07424
TEL. (973) 785-4347
FAX (973) 785-3318

TITLE: HD-HPCWP-TX			
DRAWN BY: JRE	DATE: 11/20/15	REV: -	
DWG#: HD-HPCWP-TX		SCALE: -	