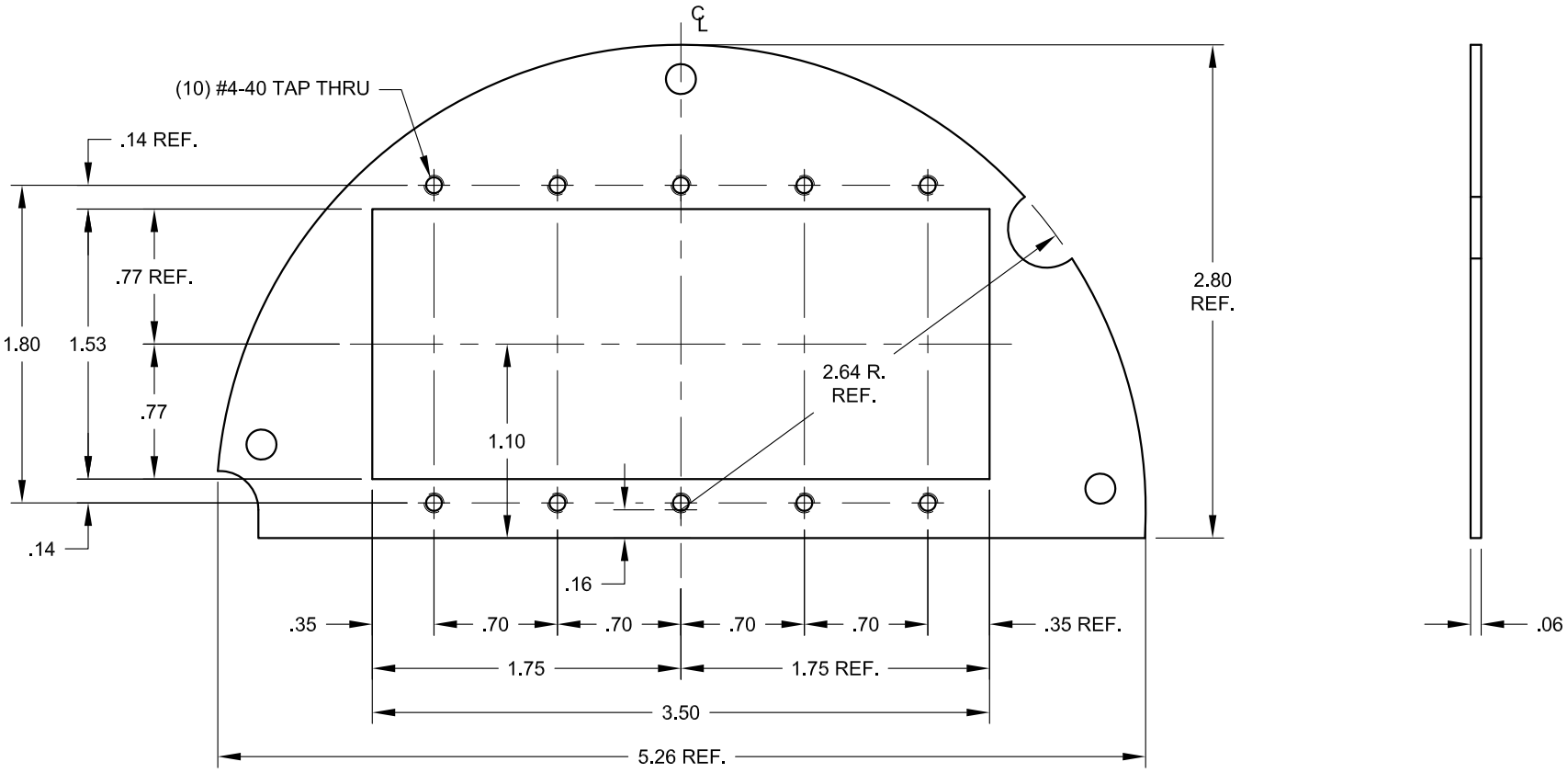

FSR inc.
244 BERGEN BLVD.
WOODLAND PARK, NJ 07424
TEL. (973) 785-4347
FAX (973) 785-3318

TITLE: SF6-SPL8			
DRAWN BY: JRE	DATE: 09/24/13	REV: -	
DWG#: SF6-SPL8		SCALE: -	