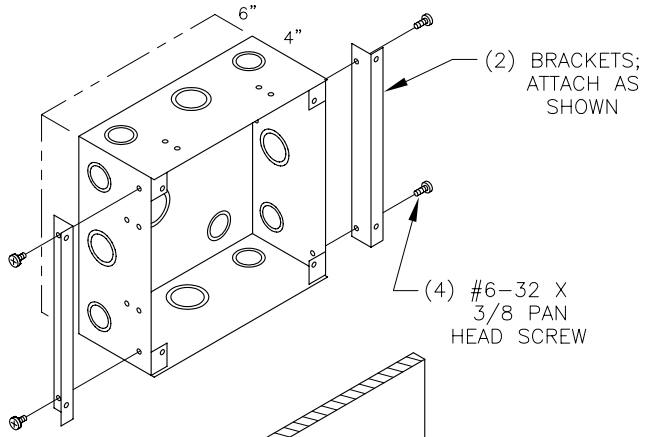

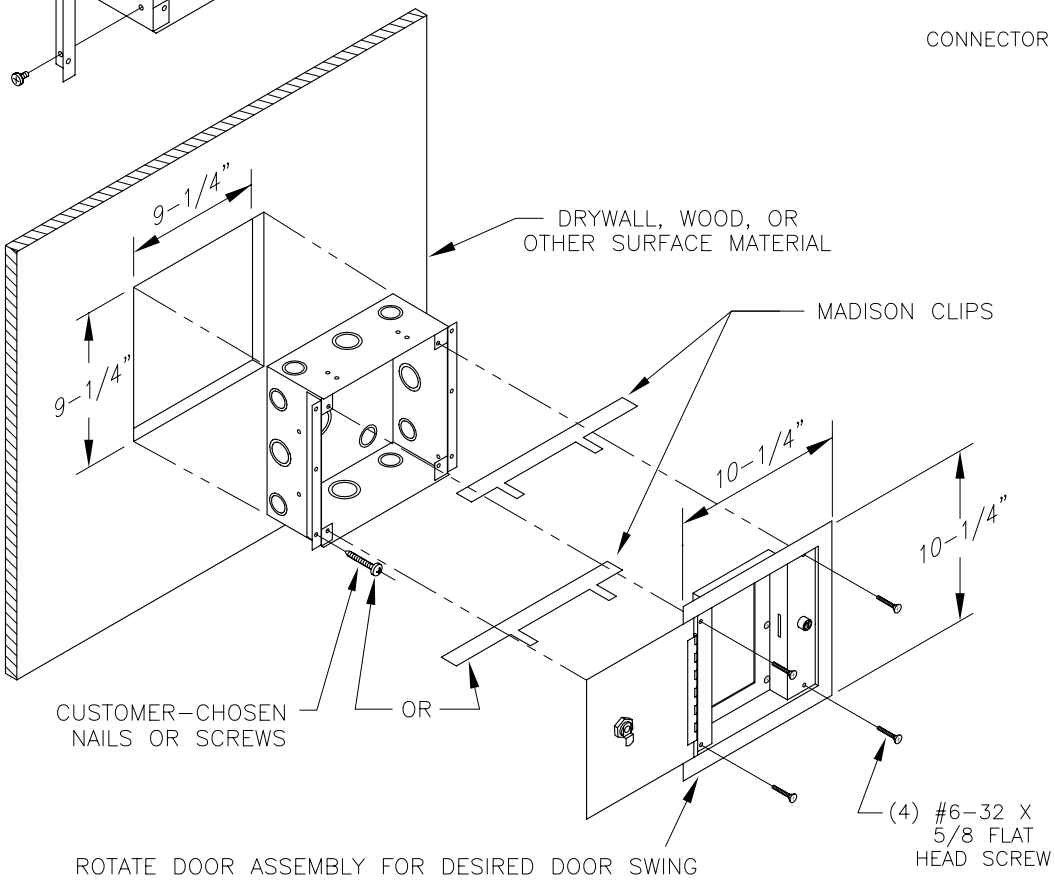

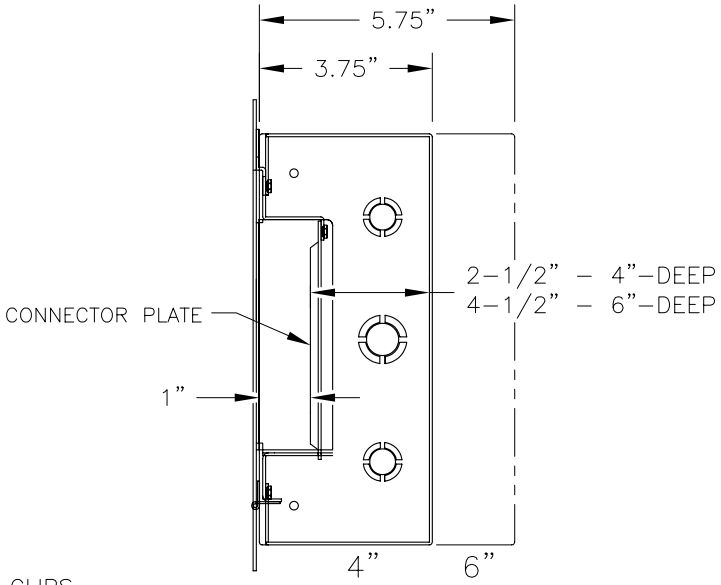

CONNECTOR PLATE/DEPTH DETAIL

FSR inc.
244 BERGEN BLVD.
W. PATERSON, NJ 07424
TEL. (973) 785-4347
FAX (973) 785-3318

TITLE: 4G WALLBOX MTG PROCEDURE FOR EXISTING WALL INSTALLATION		
DRAWN BY: JRE	DATE: 08/03/05	REV: –
DWG#: WB-4-EXST		SCALE: –