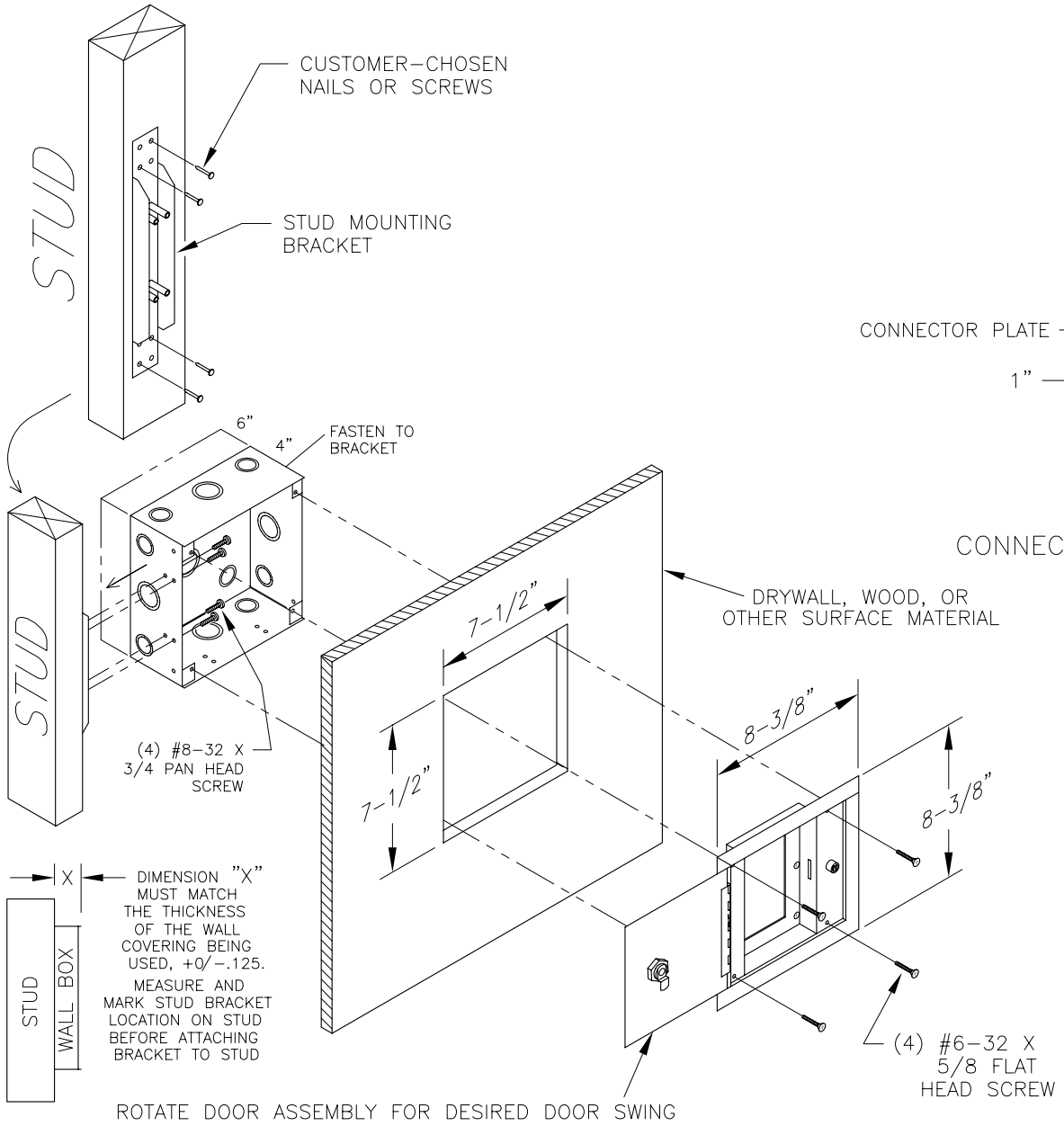

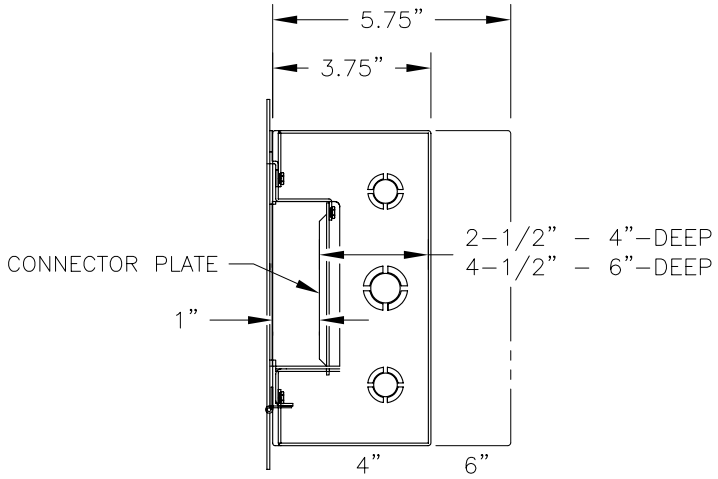

CONNECTOR PLATE/DEPTH DETAIL

FSR inc.
244 BERGEN BLVD.
W. PATERSON, NJ 07424
TEL. (973) 785–4347
FAX (973) 785–3318

TITLE: 3G WALLBOX MTG PROCEDURE FOR NEW CONSTRUCTION INSTL			
DRAWN BY: JRE	DATE: 08/03/05	REV: –	
DWG#: WB–3–NEW		SCALE: –	