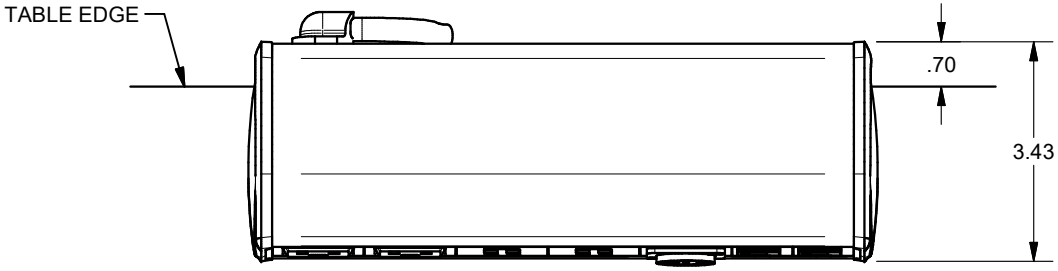

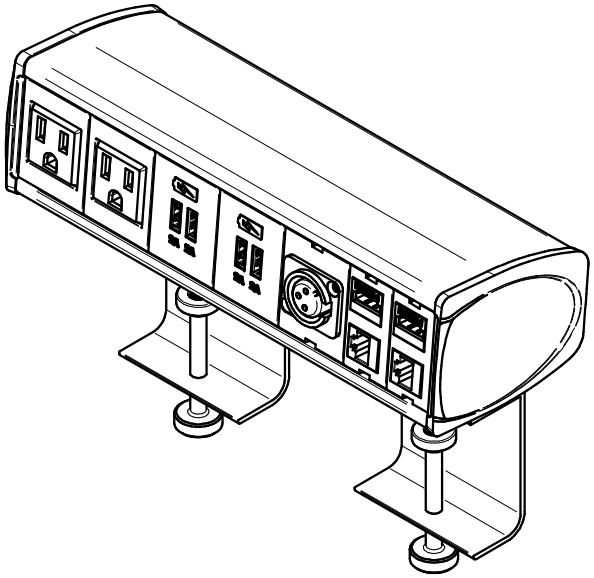

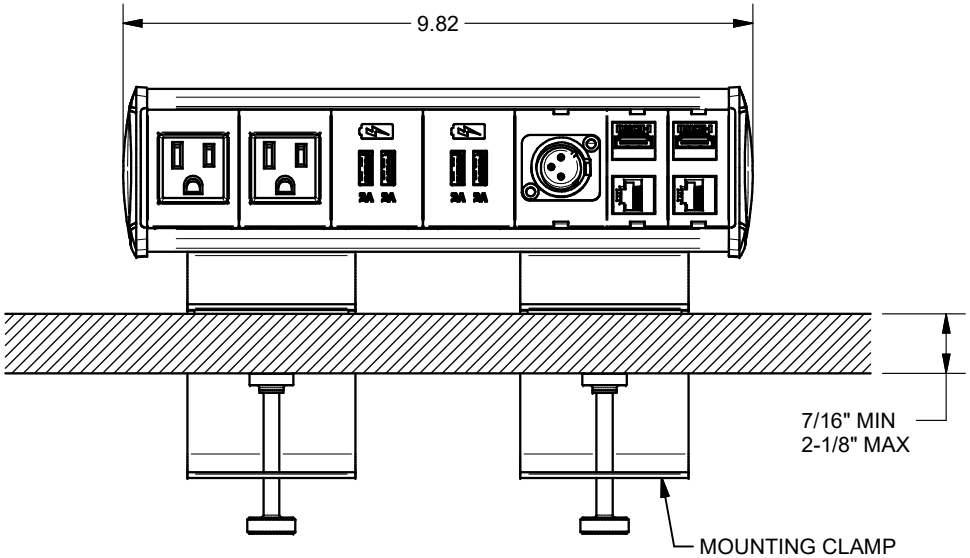

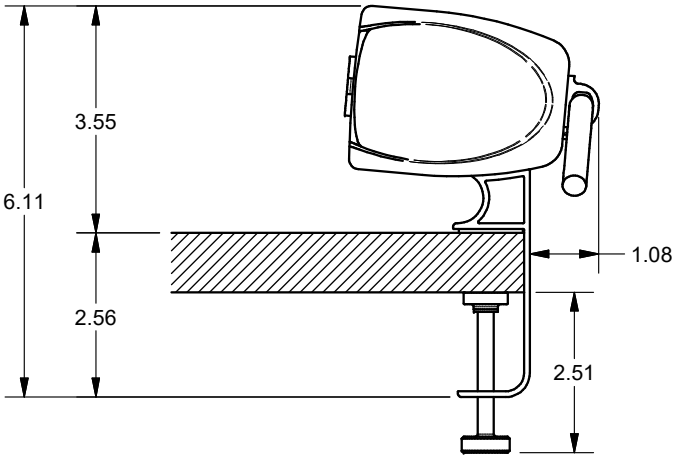

AUDIO, VIDEO, KEYSTONE CONNECTORS AND CABLES SOLD SEPARATELY.

UNIT PROVIDED WITH KEYSTONE SINGLE, DUAL AND BLANK INSERT.

FSR inc.
244 BERGEN BLVD.
WOODLAND PARK, NJ 07424
TEL (973) 785-4347
FAX (973) 785-3318

TITLE: SYM-CL-2AC-2CA-1XLR-2SS		
DRAWN BY: JRE	DATE: 11/21/18	REV: -
DWG#: SYM-CL-2AC-2CA-1XLR-2SS		SCALE: -