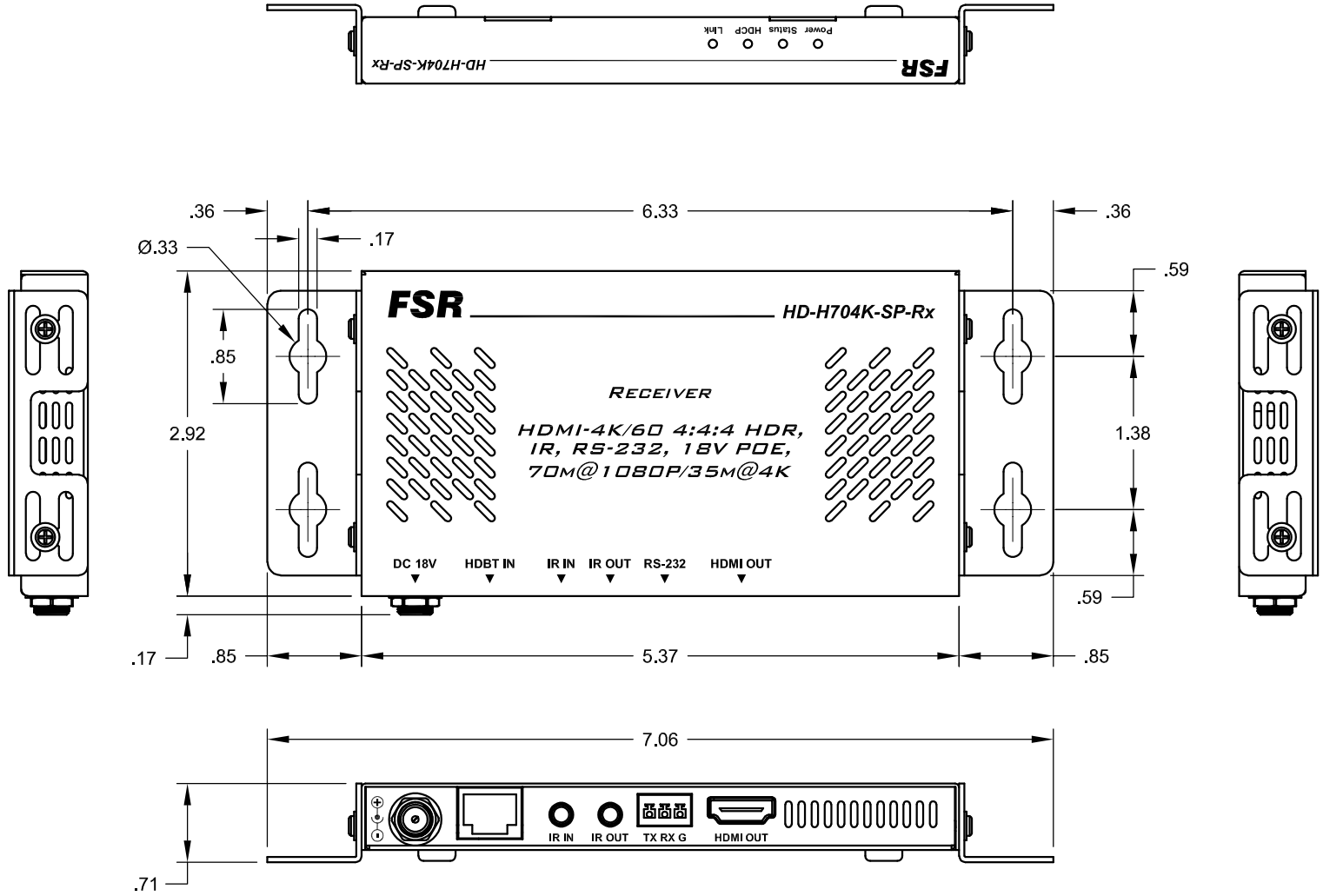

FSR inc.
244 BERGEN BLVD.
WOODLAND PARK, NJ 07424
TEL. (973) 785-4347
FAX (973) 785-3318

TITLE: HD-H704K-SP-Rx			
DRAWN BY: JRE	DATE: 10/03/18	REV: -	
DWG#: HD-H704K-SP-Rx	SCALE: -		